85 ~ 100W Ultra Slim Step Shape DIN Rail

HDR-100 series

User's Manual

LPS (Blank type only) UL508 UL62368-1 BS EN/EN61558 R33100 RoHS TPTC004 AS/NZS60950-1 IEC62368-1

Features

- Ultra slim design with 70mm(4SU) width
- Universal input 85~264VAC(277VAC operational)
- No load power consumption<0.3W
- Isolation class Ⅱ
- Pass LPS (Limited power source) for Blank type
- DC output voltage adjustable
- Protections : Short circuit / Overload / Over voltage
- Cooling by free air convection (working temperature:-30~+70°C)
- DIN rail TS-35/7.5 or 15 mountable
- LED indicator for power on
- 3 years warranty

Applications

- Household control system
- Building automation
- Industrial control system
- Factory automation
- Electro-mechanical apparatus

GTIN CODE

MW Search: https://www.meanwell.com/serviceGTIN.aspx

Description

HDR-100 is one economical ultra slim 100W DIN rail power supply series, adapt to be installed on TS-35/7.5 or TS-35/15 mounting rails. The body is designed 70mm(4SU) in width, which allows space saving inside the cabinets. The entire series adopts the full range AC input from 85VAC to 264VAC(277VAC operational) and conforms to BS EN/EN61000-3-2, the norm the European Union regulates for harmonic current. HDR-100 is designed with plastic housing that it can effectively prevent user from electric hazards. With working efficiency up to 90%, the entire series can operate at the ambient temperature between -30℃ and 70℃ under air convection. The complete protection functions and relevant certificates for home automations and industrial control apparatus (IEC62368-1,UL508, UL62368-1, BS EN/EN61558-2-16)make HDR-100 a very competitive power supply solution for household and industrial applications.

Model Encoding

HDR - 100 - 12 N

- N: Performance difference
- 12: Output voltage
- 100: Rated wattage
- HDR: Series name

Type	Description	Note
Blank	92W max, Pass LPS with a narrower output adjustable range	In stock
N	100W max, Non-LPS with a wider output adjustable range	In stock

SPECIFICATION

MODEL		HDR-100-12	HDR-100-12N	HDR-100-15	HDR-100-15N	HDR-100-24	HDR-100-24N	HDR-100-48	HDR-100-48N
OUTPUT	DC VOLTAGE	12V		15V		24V		48V	
	RATED CURRENT	7.1A	7.5A	6.13A	6.5A	3.83A	4.2A	1.92A	2.1A
	CURRENT RANGE	0 ~ 7.1A	0 ~ 7.5A	0 ~ 6.13A	0 ~ 6.5A	0 ~ 3.83A	0 ~ 4.2A	0 ~1.92A	0 ~ 2.1A
	RATED POWER	85.2W	90W	92W	97.5W	92W	100.8W	92.2W	100.8W
	RIPPLE & NOISE (max.) Note.2	120mVp-p		120mVp-p		150mVp-p		240mVp-p	
	VOLTAGE ADJ. RANGE — Pass LPS	12 ~ 13V		15 ~ 17V		24 ~ 25.5V		48 ~ 48.7V	
	VOLTAGE ADJ. RANGE — Non LPS	12~ 13.8V		13.5 ~ 18V		21.6 ~ 29V		43.2 ~ 55.2V	
	VOLTAGE TOLERANCE Note.3	±2.0%		±1.0%		±1.0%		±1.0%	
	LINE REGULATION	±1.0%		±1.0%		±1.0%		±1.0%	
	LOAD REGULATION	±1.0%		±1.0%		±1.0%		±1.0%	
	SETUP, RISE TIME	500ms, 60ms/230VAC 500ms, 60ms/115VAC at full load							
	HOLD UP TIME (Typ.)	30ms/230VAC 12ms/115VAC at full load							
INPUT	VOLTAGE RANGE	85 ~ 264VAC (277VAC operational) 120 ~ 370VDC (390VDC operational)							
	FREQUENCY RANGE	47 ~ 63Hz							
	EFFICIENCY (Typ.)	88%		89%		90%		90%	
	AC CURRENT (Typ.)	3A/115VAC 1.6A/230VAC							
	INRUSH CURRENT (Typ.)	COLD START 35A/115VAC 70A/230VAC							
PROTECTION	OVERLOAD	HDR-100 : 102 ~ 110% rated output power ; HDR-100-xxN : 105 ~ 150% rated output power							
		Hiccup mode when output voltage <50%, recovers automatically after fault condition is removed Constant current limiting within 50% ~100% rated output voltage, recovers automatically after fault condition is removed							
	OVER VOLTAGE	14.2 ~ 16.2V		18.8 ~ 22.5V		30 ~ 36V		56.5 ~ 64.8V	
		Protection type : Shut down o/p voltage, re-power on to recover							
ENVIRONMENT	WORKING TEMP.	-30 ~ +70℃ (Refer to "Derating Curve")							
	WORKING HUMIDITY	20 ~ 90% RH non-condensing							
	STORAGE TEMP., HUMIDITY	-40 ~ +85℃, 10 ~ 95% RH non-condensing							
	TEMP. COEFFICIENT	±0.03%/℃ (0 ~ 50℃) RH non-condensing							
	VIBRATION	10 ~ 500Hz, 2G 10min./1cycle, period for 60min. each along X, Y, Z axes; Mounting: Compliance to IEC60068-2-6							
	OPERATING ALTITUDE	2000 meters							
	OVER VOLTAGE CATEGORY	Ⅲ ; According to EN61558, EN50178,EN60664-1, EN62477-1 ; altitude up to 2000 meters							
SAFETY & EMC (Note 5)	SAFETY STANDARDS	UL62368-1, UL508, TUV BS EN/EN61558-2-16, BS EN/EN61558-1, IEC62368-1, EAC TP TC 004, BSMI CNS15598-1 approved; Design refer to TUV BS EN/EN62368-1							
	WITHSTAND VOLTAGE	I/P-O/P:4KVAC							
	ISOLATION RESISTANCE	I/P-O/P:100M Ohms / 500VDC / 25℃/ 70% RH							
	EMC EMISSION	**Parameter**	**Standard**	**Test Level / Note**					
		Conducted	BS EN/EN55032(CISPR32), CNS15936	Class B					
		Radiated	BS EN/EN55032(CISPR32), CNS15936	Class B					
		Harmonic Current (Note 5)	BS EN/EN61000-3-2	Class A					
		Voltage Flicker	BS EN/EN61000-3-3	-------					
	EMC IMMUNITY	BS EN/EN55035, BS EN/EN61000-6-2, BS EN/EN61204-3							
		Parameter	**Standard**	**Test Level /Note**					
		ESD	BS EN/EN61000-4-2	Level 3, 8KV air; Level 2, 4KV contact, criteria A					
		Radiated Susceptibility	BS EN/EN61000-4-3	Level 3, criteria A					
		EFT/Burest	BS EN/EN61000-4-4	Level 3, criteria A					
		Surge	BS EN/EN61000-4-5	Level 4,2KV/L-N, criteria A					
		Conducted	BS EN/EN61000-4-6	Level 3, criteria A					
		Magnetic Field	BS EN/EN61000-4-8	Level 4, criteria A					
		Voltage Dips and interruptions	BS EN/EN61000-4-11	>95% dip 0. 5 periods, 30% dip 25 periods, >95% interruptions 250 periods					
OTHERS	MTBF	3271.9K hrs min. Telcordia SR-332 (Bellcore) ; 856.5K hrs min. MIL-HDBK-217F (25℃)							
	DIMENSION	70*90*54.5mm (W*H*D)							
	PACKING	0.27Kg; 48pcs/13.74Kg/0.96CUFT							

NOTE

1. All parameters NOT specially mentioned are measured at 230VAC input, rated load and 25℃ of ambient temperature.
2. Ripple & noise are measured at 20MHz of bandwidth by using a 12" twisted pair-wire terminated with a 0.1 μF & 47 μF parallel capacitor.
3. Tolerance : includes set up tolerance, line regulation and load regulation.
4. Harmonic current test at 90% load for HDR-100-xxN.
5. The power supply is considered as an independent unit, but the final equipment still need to re-confirm that the whole system complies with the EMC directives. For guidance on how to perform these EMC tests, please refer to "EMI testing of component power supplies." (as available on https://www.meanwell.com//Upload/PDF/EMI_statement_en.pdf)
6. The ambient temperature derating of 3.5℃/1000m with fanless models and of 5℃/1000m with fan models for operating altitude higher than 2000m(6500ft).

※ Product Liability Disclaimer : For detailed information, please refer to https://www.meanwell.com/serviceDisclaimer.aspx

Block Diagram

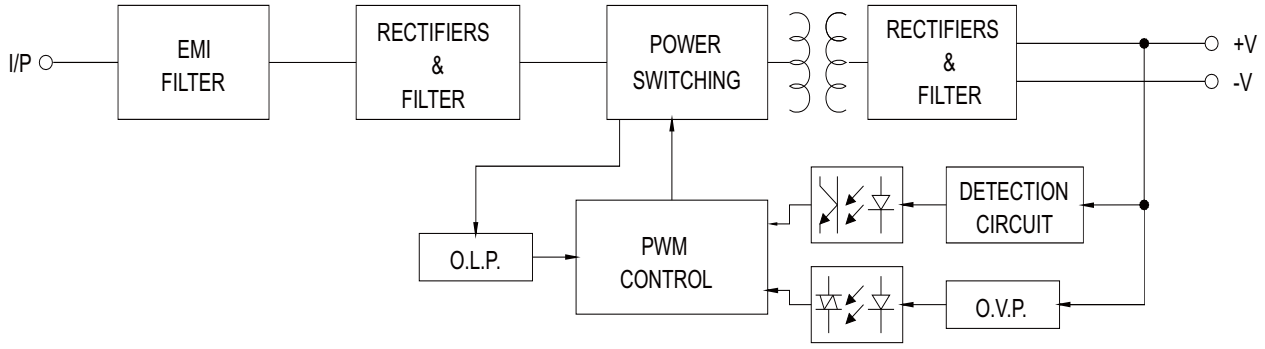

Derating Curve VS Ambient Temperature

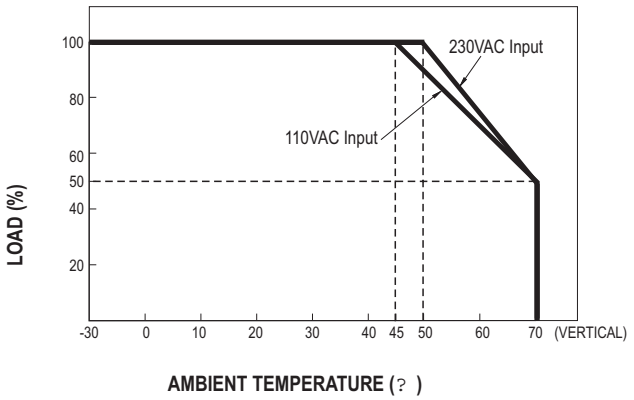

Output Derating VS Input Voltage

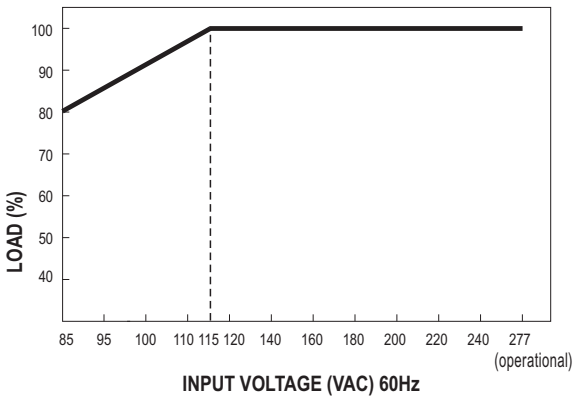

■ Mechanical Specification

(Unit: mm , tolerance ± 0.5mm)

Case No.HDR-15

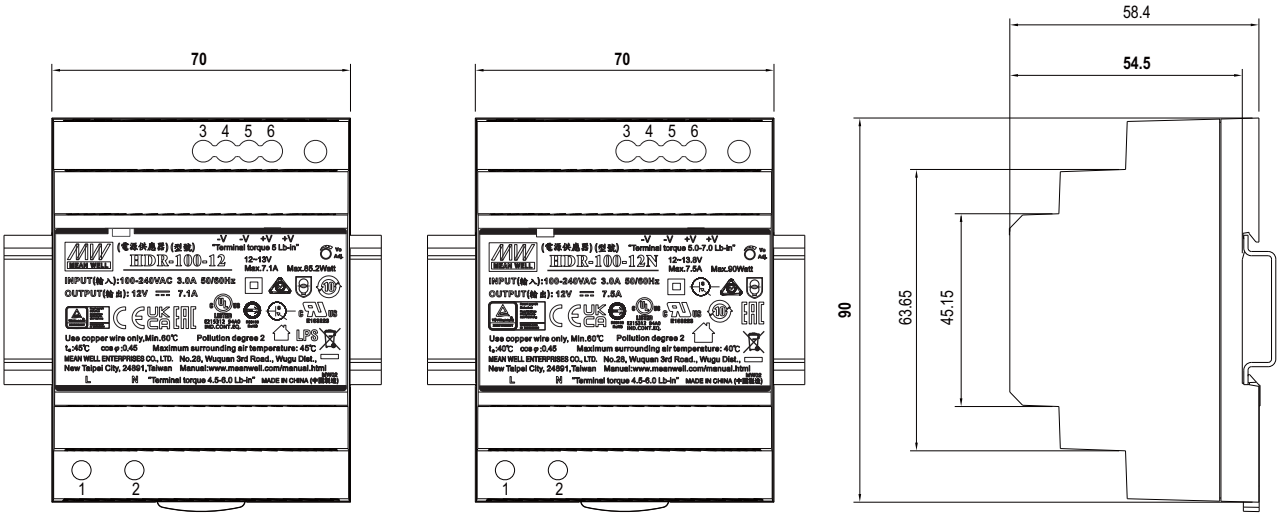

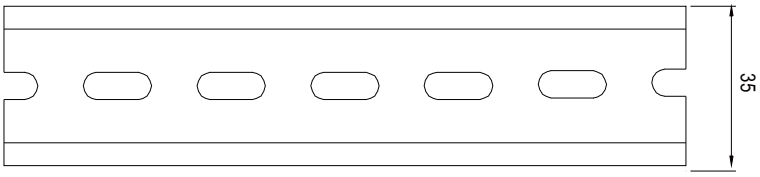

ADMISSIBLE DIN-RAIL:TS35/7.5 OR TS35/15

Terminal Pin No. Assignment

Pin No.	Assignment	Pin No.	Assignment
1	AC/L	3,4	-V
2	AC/N	5,6	+V

■ Installation Manual

Please refer to : http://www.meanwell.com/manual.html